Appendix E
Light Load Load Flow and Quick View

Contents Load Flow Summaries

	CE	OHNY	WGEN	PAGE
Lite25	2811	500	1295	E-1
Lite93	2816	-157	2197	E-5

Contents

	# OF Nia. Units Rejected			
	0	3	4	PAGE
Lite25	WC15			E-9
Lite93	WC15		WC154	E-10

PA301 PA302 Out of Service
February 1995

CASE :MAY 30 1993 EVENT MINIMUM LOAD CASE

LITE25 :CE2811 TE6205 MS1028 OHNY 500 WGEN1295

MON, JAN 30 1995 08:49

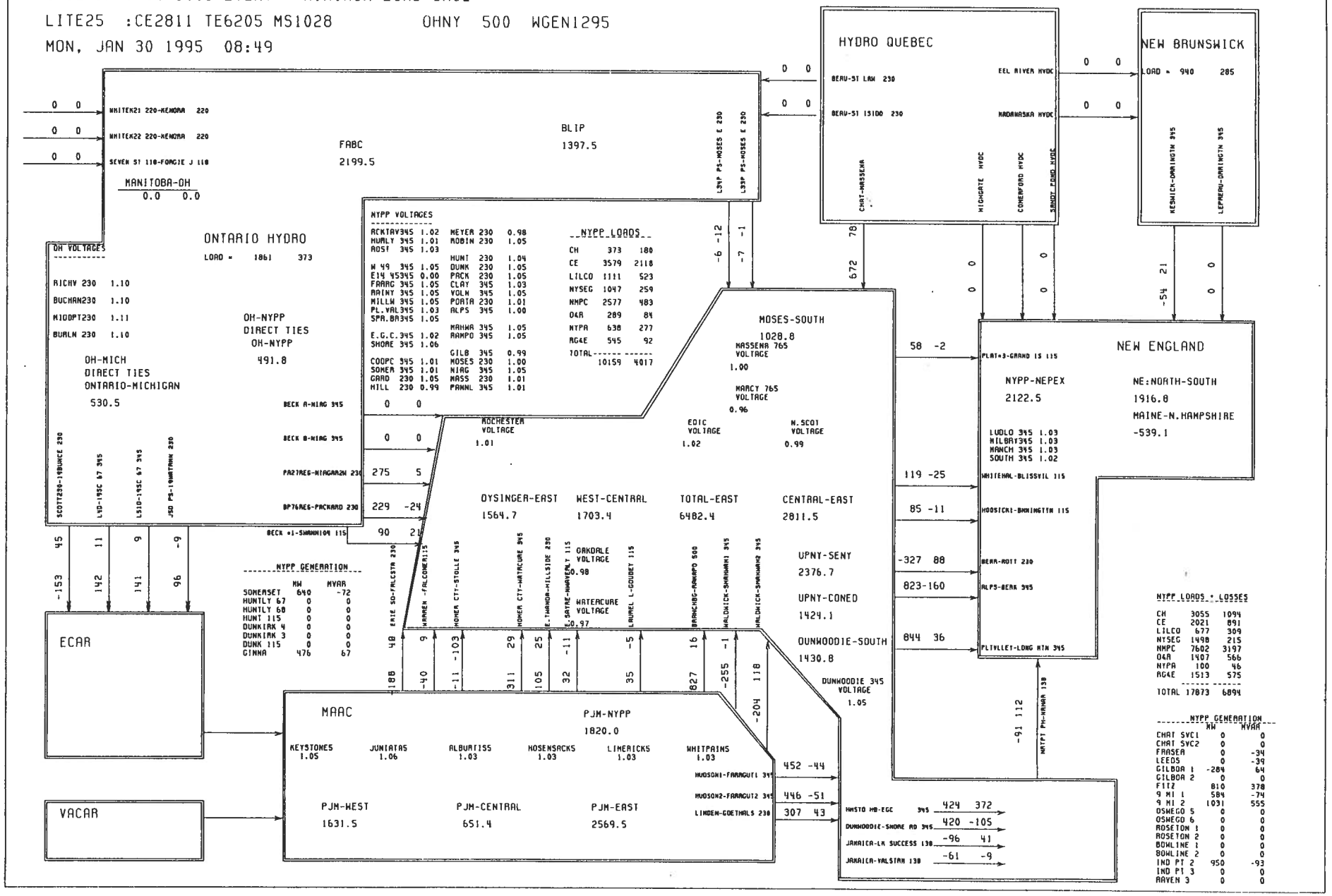

E-1

E-2

****

CASE :MAY 30 1993 EVENT MINIMUM LOAD CASE
LITE25 :CE2811 TE6205 MS1028 OHNY 500 WGEN1295

STATION VOLTAGES

N.SCOT77 345 = 339.9	LEEDS 3 345 = 345.2	MARCY T1 345 = 354.0
MARCY765 765 = 731.5	MASS 765 765 = 763.9	EDIC 345 = 352.7
ROCH 345 345 = 349.9	PANNELL3 345 = 349.6	VOLNEY 345 = 361.1
PLTVLLEY 345 = 353.8	RAMAP345 345 = 360.7	FRASR345 345 = 343.2
OAKDL345 345 = 337.2	COOPC345 345 = 347.6	WATRC345 345 = 334.1
NIAG 345 345 = 353.1	OAKDL230 230 = 221.1	OAKDL115 115 = 111.4
MEYER230 230 = 226.2	MEYER115 115 = 120.1	E.NOR115 115 = 112.0
NIAGAR2E 230 = 240.5	NIAGAR2W 230 = 240.5	NIAG115E 115 = 122.3
NIAG115W 115 = 124.8	DUNKIRK 230 = 241.7	GARDV230 230 = 241.2
ALBANY 115 = 115.0	MOS 115 115 = 115.7	ROTT 115 115 = 115.5

GENERATOR/SVC QUANTITIES

GENERATION	MW	MVAR	GENERATION	MW	MVAR
GILBOA#117.0	-284.0	63.6	GILBOA#217.0	0.0	0.0
GILBOA#317.0	-278.0	70.0	GILBOA#417.0	-285.0	70.0
9M PT 1G23.0	584.1	-73.8	9M PT 2G25.0	1031.0	555.2
OSWGO 5G22.0	0.0	0.0	OSWGO 6G22.0	0.0	0.0
JAFITZ1G24.0	810.0	377.8	ROSE GN124.0	0.0	0.0
ROSE GN224.0	0.0	0.0	IND PT 222.0	950.0	-93.0
RAV 3 22.0	0.0	0.0	KINTIG2424.0	640.0	-72.1
BOWLINE 20.0	0.0	0.0	BOWLIN2020.0	0.0	0.0
POLETTI 26.0	188.9	-25.1	IP#3 GEN22.0	0.0	0.0
GINNA 1919.0	476.3	66.7	FRA S345 345	0.0	-33.8
LEEDS 3 345	0.0	-39.2	NIAG. 8 13.8	100.0	-13.9

GENERATOR COMPLEX REPORT

NAME	MW	MVAR	# UNITS
OSWEGO-GENERATI	2425.1	859.2	3
NIAGARA-GENERAT	1300.0	266.5	13
ST.LAWRENCE-GEN	912.0	-109.4	16
GILBOA-GENERATI	-847.0	203.6	3
HUNTLEY-GENERAT	0.0	0.0	0
DUNKIRK-GENERAT	0.0	0.0	0
ROSETON-GENERAT	0.0	0.0	0
ALBANY-STEAM-GE	0.0	0.0	0
HOMER-CITY-GENE	779.0	-244.1	3
BEARSWAMP-GENER	-283.0	100.0	1

INTERFACE FLOW REPORT

DESCRIPTION	MW	MVAR	DESCRIPTION	MW	MVAR
DYSINGER-EAST	1564.7	-31.2	WEST-CENTRAL	1703.4	-128.4
VOLNEY EAST	4019.3	-303.3	MOSES-SOUTH	1028.8	-5.5
CENTRAL-EAST	2811.5	-577.9	UPNY-SENY	2376.7	-673.2
UPNY-CONED	1424.1	-489.8	DUNWOODIE-SOUTH	1430.8	-957.3
NYPP-NEPEX	2122.5	-62.6	OH-NYPP	491.8	-33.0
ROSEMT-NMPC	63.4	92.3	BEAUHARNIOS-NYPP	678.9	149.3
HQ -> OH	0.0	0.0	WESTERN EXPORT	1295.9	41.6
TOTAL-EAST	6205.5	-720.0	PJM-NYPP	1543.0	27.6
FEFABC	1159.3	12.6	FSFABC	1040.3	-328.5
FABC	2199.5	-315.9	ONTARIO-MICHIGAN	530.5	-32.1

SHUNT REPORT

MARCY T1 345 = 400.	N.SCOT77 345 = 0.	LEEDS 3 345 = 0.
MOS 115 115 = 0.	PORTER 1 115 = 2.	MARCY765 765 = 0.
MASS 765 765 = 0.	FRASR345 345 = 280.	COOPC345 345 = 0.
ROCK TAV 345 = 0.	FISHKILL 345 = 0.	GILB 345 345 = 0.
ROTRDM.2 230 = 169.	ROCH 345 345 = 0.	PANNELL3 345 = 0.
OAKDL345 345 = 0.	WATRC345 345 = 0.	N.SCOT99 345 = 0.
= 0.	= 0.	= 0.

HVDC LINE FLOW REPORT

LINE NAME	MDC	MW	MVAR
CHAT GC1 120 ->CHAT GC1 308*	1 0	0.0	0.0
CHAT GC2 308 ->CHAT GC2 120*	2 0	0.0	0.0
HIGHGT31 120 ->HIGHGATE 115*	3 0	0.0	0.0
MAD30827 308 ->MADNBR47 345*	4 0	0.0	0.0
EEL34A3113.0* ->EELO13 913.0	5 0	0.0	0.0
RAD30858 308 ->SANDY345 345*	8 0	0.0	0.0
RAD30858 308 ->SANDY345 345*	9 0	0.0	0.0

E-3

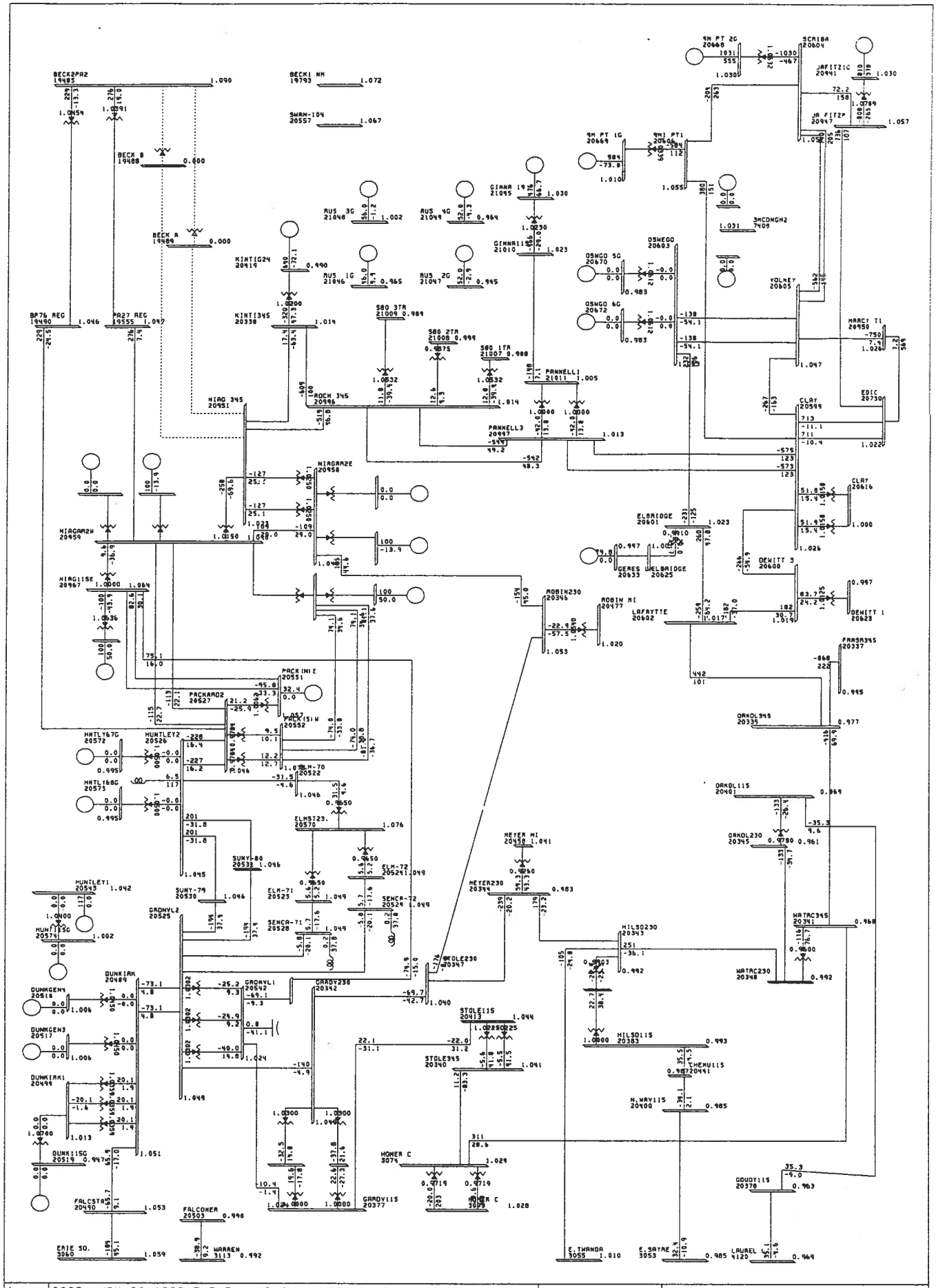
BECK2PA2 19489
BECK1 NM 19793
SWAN-104 20557
BECK B 19488
BECK A 19489
KINTIG24 20419
KINTI345 20338
BP76 REG 19490
PA27 REG 19555
RUS 3G 21048
RUS 4G 21049
RUS 1G 21046
RUS 2G 21047
SB0 3TR 21009
SB0 2TR 21008
SB0 1TR 21007
GINNA 19 21045
GINNA115 21010
PANNELL1 21011
PANNELL3 20997
ROCH 345 20996
NIAG 345 20951
NIAGARA2E 20958
NIAGARA2W 20959
NIAG115E 20967
PACK(N)E 20551
PACKARD2 20527
PACK(S)W 20552
MUNTLEY2 20526
MUNTL67G 20572
MUNTL68G 20573
ELM-70 20522
ELMST23 20570
SUNY-80 20533
SUNY-79 20530
ELM-71 20523
ELM-72 20524
SENCA-71 20528
SENCA-72 20524
MUNTLEY1 20543
MUNTL15G 20574
GRANVL2 20525
GRANVL1 20542
GRANV230 20342
GRANV115 20377
DUNKIRK 20499
DUNKGEN4 20516
DUNKGEN3 20517
DUNKIRK1 20499
DUNK115G 20519
FALCSTA7 20490
FALCONER 20503
WARREN 3113
ERIE SO. 3060
HOWER C 3074
STOLE230 20347
STOLE115 20413
STOLE345 20340
MEYER HI 20458
MEYER230 20344
HILSD230 20343
HILSD115 20383
WATRC230 20348
WATRC345 20341
GOUDY115 20370
LAUREL 4120
E.SAYRE 3053
E.THANDA 3055
OAKOL345 20335
OAKOL115 20401
OAKOL230 20345
FRASR345 20337
ROBIN230 20346
ROBIN HI 20477
LAFAYTTE 20602
DEWITT 3 20600
DEWITT 1 20623
CLAY 20599
CLAY 20616
EDIC 20730
MARCY T1 20950
VOLNEY 20605
OSWEGO 20603
OSWGO 5G 20670
OSWGO 6G 20672
ELBRIDGE 20601
GERES 20633
WELBRIDGE 20625
3MCDMGM2 7409
SCRIBA 20604
JAFITZ1G 20441
JA FITZP 20447
9M PT 2G 20668
9M PT 1G 20669
9M1 PT1 20606
CASE :MAY 30 1993 EVENT MINIMUM LOAD CASE
LITE25 :CE2811 TE6205 MS1028 OHNY 500 WGEN1295
WESTERN ONE LINE MON. JAN 30 1995 08:56
KV: ≤138 ,≤230 ,≤345
BUS - VOLTAGE(PU)
BRANCH - MW/MVAR
EQUIPMENT - MW/MVAR
POWER TECHNOLOGIES, INC.

E-4

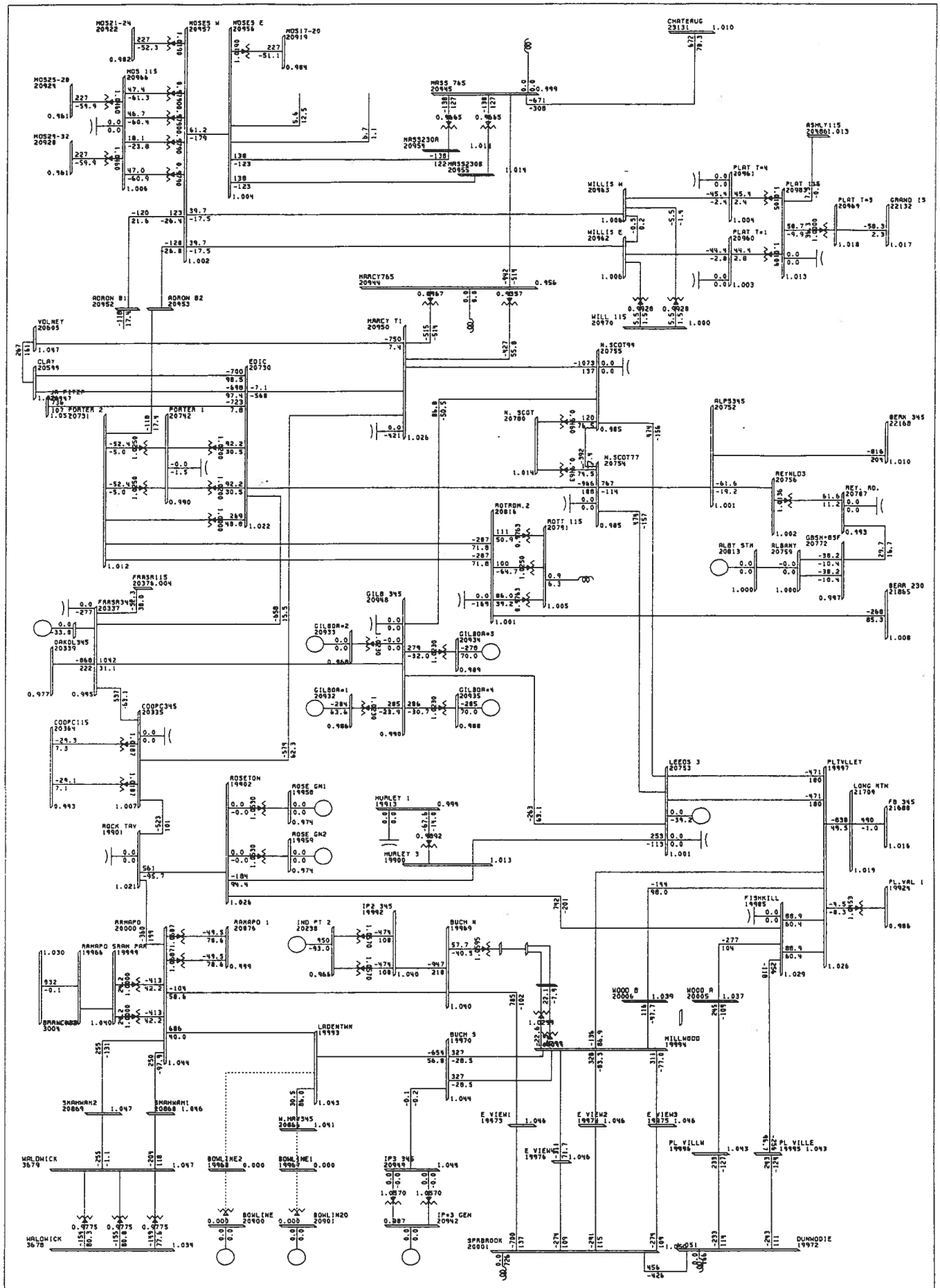

CASE :MAY 30 1993 EVENT MINIMUM LOAD CASE
LITE25 :CE2811 TE6205 MS1028 OHNY 500 WGEN1295
EASTERN ONE LINE MON. JAN 30 1995 08:54

KV: ≤138 ,≤230 ,≤345

BUS - VOLTAGE (PU)
BRANCH - MW/MVAR
EQUIPMENT - MW/MVAR

CASE :MAY 30 1993 EVENT MINIMUM LOAD CASE
LITE93 :CE2816 TE7131 MS924 OHNY -157 WGEN2197
FRI, JAN 27 1995 15:12

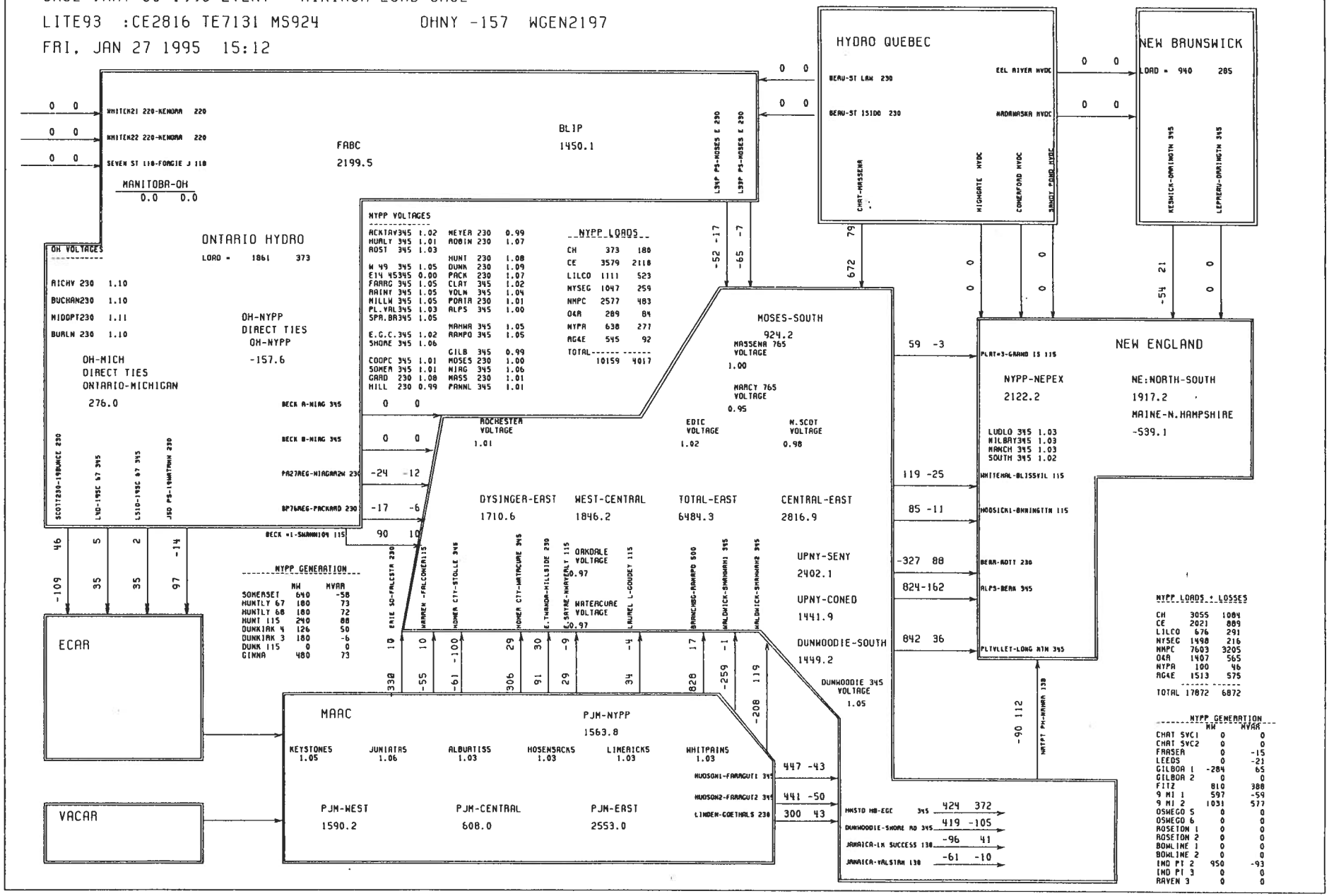

E-5

E-6

CASE :MAY 30 1993 EVENT MINIMUM LOAD CASE
LITE93 :CE2816 TE7131 MS924 OHNY -157 WGEN2197

STATION VOLTAGES

N.SCOT77 345 = 339.6	LEEDS 3 345 = 345.2	MARCY T1 345 = 353.2
MARCY765 765 = 730.5	MASS 765 765 = 763.6	EDIC 345 = 351.9
ROCH 345 345 = 348.6	PANNELL3 345 = 348.1	VOLNEY 345 = 360.4
PLTVLLEY 345 = 353.8	RAMAP345 345 = 360.7	FRASR345 345 = 342.9
OAKDL345 345 = 336.3	COOPC345 345 = 347.2	WATRC345 345 = 333.4
NIAG 345 345 = 352.9	OAKDL230 230 = 220.5	OAKDL115 115 = 111.1
MEYER230 230 = 226.8	MEYER115 115 = 120.3	E.NOR115 115 = 111.7
NIAGAR2E 230 = 244.8	NIAGAR2W 230 = 244.8	NIAG115E 115 = 124.6
NIAG115W 115 = 126.5	DUNKIRK 230 = 249.6	GARDV230 230 = 247.7
ALBANY 115 = 114.9	MOS 115 115 = 115.7	ROTT 115 115 = 115.5

GENERATOR/SVC QUANTITIES

GENERATION	MW	MVAR	GENERATION	MW	MVAR
GILBOA#117.0	-284.0	65.0	GILBOA#217.0	0.0	0.0
GILBOA#317.0	-278.0	70.0	GILBOA#417.0	-285.0	70.0
9M PT 1G23.0	597.3	-59.3	9M PT 2G25.0	1031.0	577.4
OSWGO 5G22.0	0.0	0.0	OSWGO 6G22.0	0.0	0.0
JAFITZ1G24.0	810.0	387.8	ROSE GN124.0	0.0	0.0
ROSE GN224.0	0.0	0.0	IND PT 222.0	950.0	-92.7
RAV 3 22.0	0.0	0.0	KINTIG2424.0	640.0	-58.2
BOWLINE 20.0	0.0	0.0	BOWLIN2020.0	0.0	0.0
POLETTI 26.0	186.6	-25.2	IP#3 GEN22.0	0.0	0.0
GINNA 1919.0	479.5	72.6	FRA S345 345	0.0	-14.9
LEEDS 3 345	0.0	-20.6	NIAG. 8 13.8	100.0	-25.0

GENERATOR COMPLEX REPORT

NAME	MW	MVAR	# UNITS
OSWEGO-GENERATI	2438.3	905.9	3
NIAGARA-GENERAT	1300.0	140.9	13
ST.LAWRENCE-GEN	912.0	-103.9	16
GILBOA-GENERATI	-847.0	205.0	3
HUNTLEY-GENERAT	360.0	144.8	4
DUNKIRK-GENERAT	306.0	43.8	4
ROSETON-GENERAT	0.0	0.0	0
ALBANY-STEAM-GE	0.0	0.0	0
HOMER-CITY-GENE	779.0	-244.7	3
BEARSWAMP-GENER	-283.0	100.0	1

INTERFACE FLOW REPORT

DESCRIPTION	MW	MVAR	DESCRIPTION	MW	MVAR
DYSINGER-EAST	1710.6	19.6	WEST-CENTRAL	1846.2	-94.6
VOLNEY EAST	4147.8	-346.8	MOSES-SOUTH	924.2	-4.3
CENTRAL-EAST	2816.9	-595.0	UPNY-SENY	2402.1	-678.7
UPNY-CONED	1441.9	-495.1	DUNWOODIE-SOUTH	1449.2	-961.5
NYPP-NEPEX	2122.2	-65.9	OH-NYPP	-157.6	-42.1
ROSEMT-NMPC	63.4	93.6	BEAUHARNIOS-NYPP	678.9	150.6
HQ -> OH	0.0	0.0	WESTERN EXPORT	2197.9	106.3
TOTAL-EAST	7131.6	-680.0	PJM-NYPP	2211.1	79.4
FEFABC	1181.1	23.8	FSFABC	1018.5	-317.0
FABC	2199.5	-293.2	ONTARIO-MICHIGAN	276.0	-49.7

SHUNT REPORT

MARCY T1 345 = 400.	N.SCOT77 345 = 0.	LEEDS 3 345 = 0.
MOS 115 115 = 0.	PORTER 1 115 = 2.	MARCY765 765 = 0.
MASS 765 765 = 0.	FRASR345 345 = 280.	COOPC345 345 = 0.
ROCK TAV 345 = 0.	FISHKILL 345 = 0.	GILB 345 345 = 0.
ROTRDM.2 230 = 169.	ROCH 345 345 = 0.	PANNELL3 345 = 0.
OAKDL345 345 = 0.	WATRC345 345 = 0.	N.SCOT99 345 = 0.
= 0.	= 0.	= 0.

HVDC LINE FLOW REPORT

LINE NAME	MDC	MW	MVAR
CHAT GC1 120 ->CHAT GC1 308*	1 0	0.0	0.0
CHAT GC2 308 ->CHAT GC2 120*	2 0	0.0	0.0
HIGHGT31 120 ->HIGHGATE 115*	3 0	0.0	0.0
MAD30827 308 ->MADNBR47 345*	4 0	0.0	0.0
EEL34A3113.0* ->EELO13 913.0	5 0	0.0	0.0
RAD30858 308 ->SANDY345 345*	8 0	0.0	0.0
RAD30858 308 ->SANDY345 345*	9 0	0.0	0.0

E-7

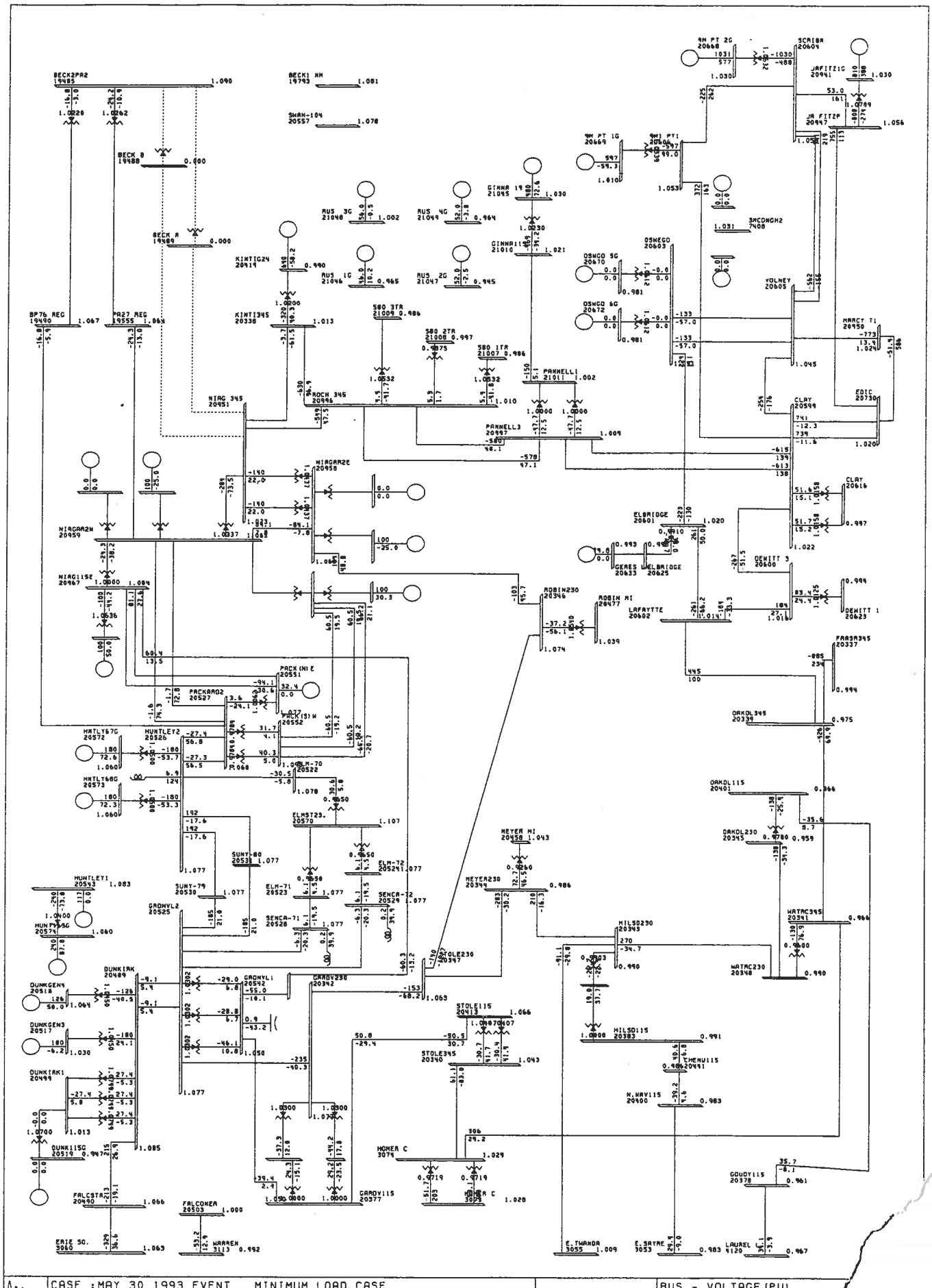

CASE ;MAY 30 1993 EVENT MINIMUM LOAD CASE
LITE93 :CE2816 TE7131 MS924 OHNY -157 . WGEN2197
WESTERN ONE LINE FRI, JAN 27 1995 16:24

KV: ≤138 ,≤230 ,≤345

BUS - VOLTAGE(PU)
BRANCH - MW/MVAR
EQUIPMENT - MW/MVAR

POWER TECHNOLOGIES, INC.

E-8

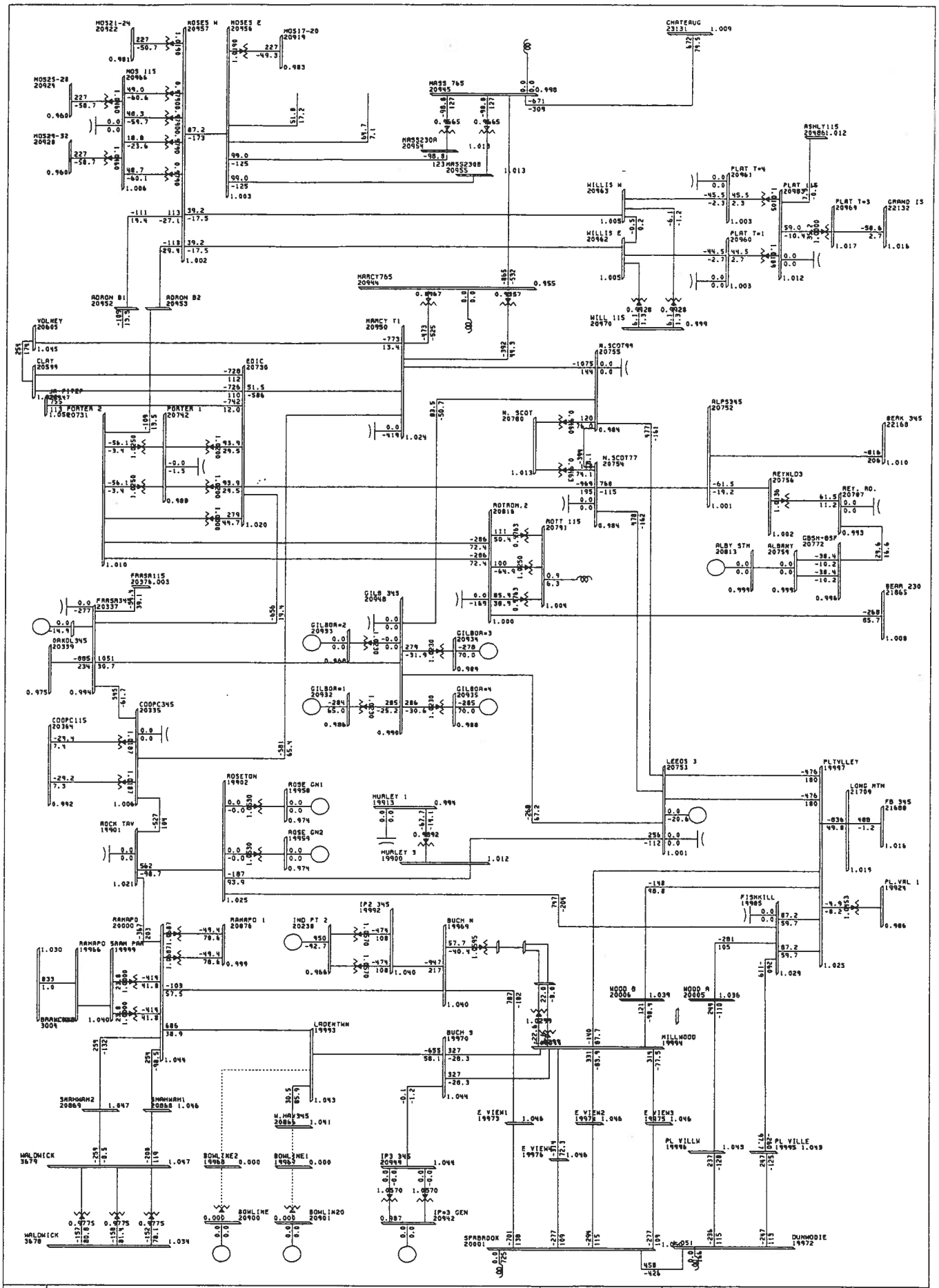

CASE :MAY 30 1993 EVENT MINIMUM LOAD CASE
LITE93 :CE2816 TE7131 MS924 OHNY -157 WGEN2197
EASTERN ONE LINE FRI, JAN 27 1995 16:20

KV: ≤138 .≤230 .≤345

BUS - VOLTAGE (PU)
BRANCH - MW/MVAR
EQUIPMENT - MW/MVAR

CASE :MAY30 1993 EVENT MINIMUM LOAD CASE
LITE25 :CE2811 TE6205 MS1028 OHNY 500 WGEN1295
NYPP STABILITY ANALYSIS WITH PA301 & PA302 OUT OF SERVICE
PEAK CENTRAL EAST = 2800 VARIOUS OH AND WESTERN GEN
FILE: OSRRT>CHAN.BIN.FLT47

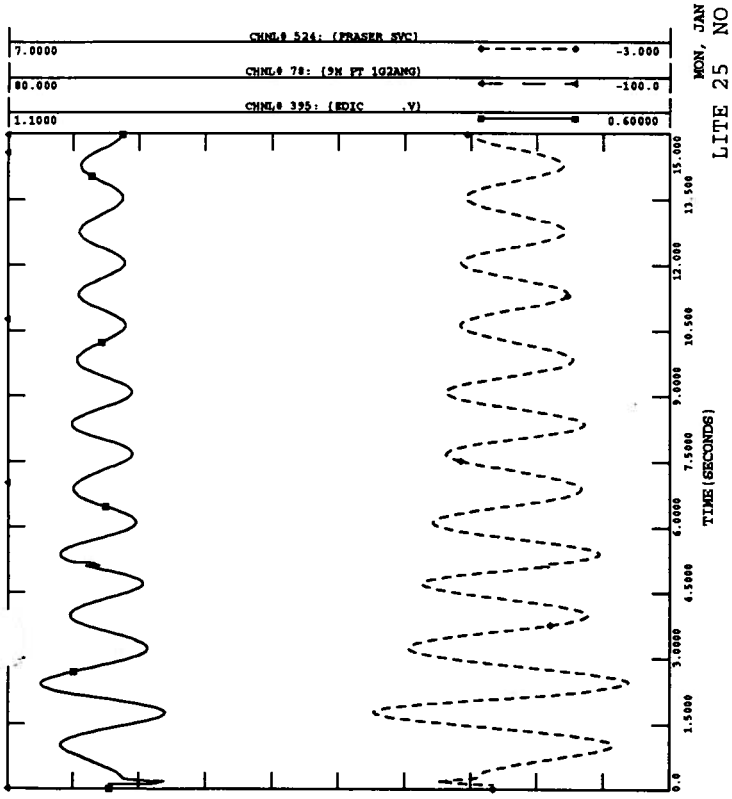

MON, JAN 30 1995 11:47
LITE 25 NO REJECTION

K-10

CASE :MAY30 1993 EVENT MINIMUM LOAD CASE
LITE93 :CE2811 TE6205 MS1028 OHNY 500 WGEN1295
NYPP STABILITY ANALYSIS WITH PA301 & PA302 OUT OF SERVICE
PEAK CENTRAL EAST = 2800 VARIOUS OH AND WESTERN GEN
FILE: OSRRT>CHAN.BIN.FLT40

MON, JAN 30 1995 11:49
LITE93 REJECT 4

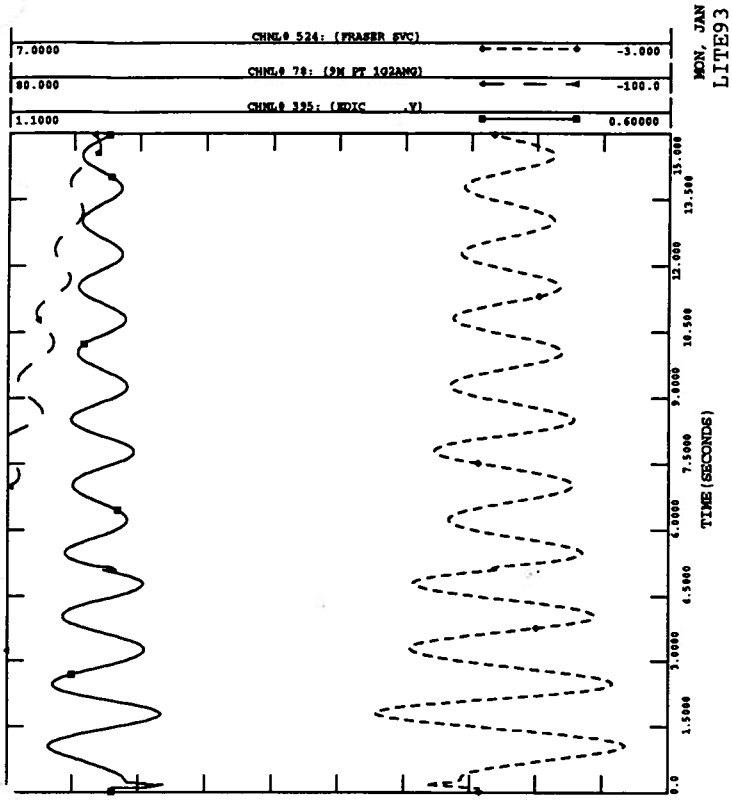

CASE :MAY30 1993 EVENT MINIMUM LOAD CASE
LITE93 :CE2811 TE6205 MS1028 OHNY 500 WGEN1295
NYPP STABILITY ANALYSIS WITH PA301 & PA302 OUT OF SERVICE
PEAK CENTRAL EAST = 2800 VARIOUS OH AND WESTERN GEN
FILE: OSRRT>CHAN.BIN.FLT39
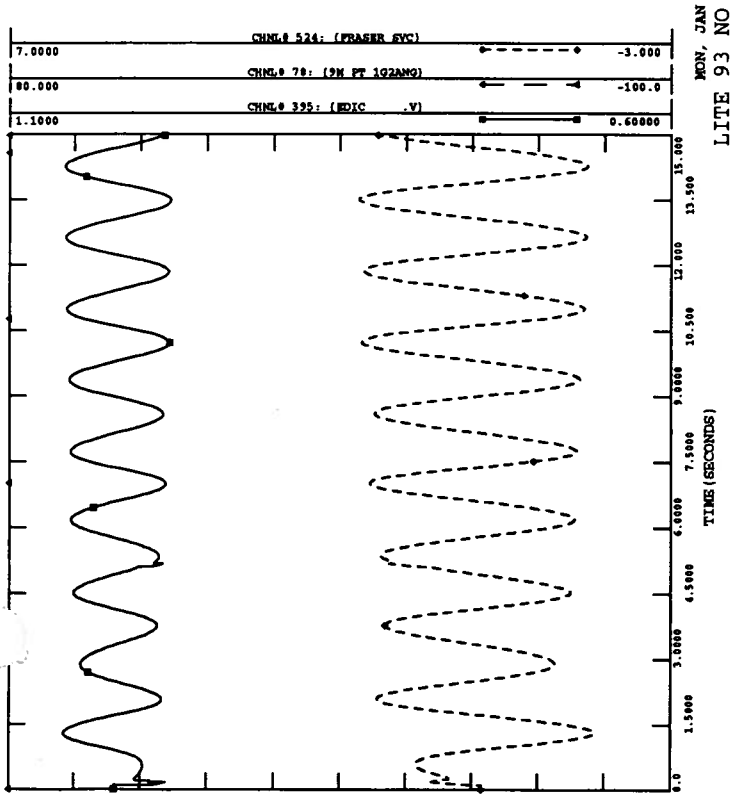
MON, JAN 30 1995 11:48
LITE 93 NO REJECTION